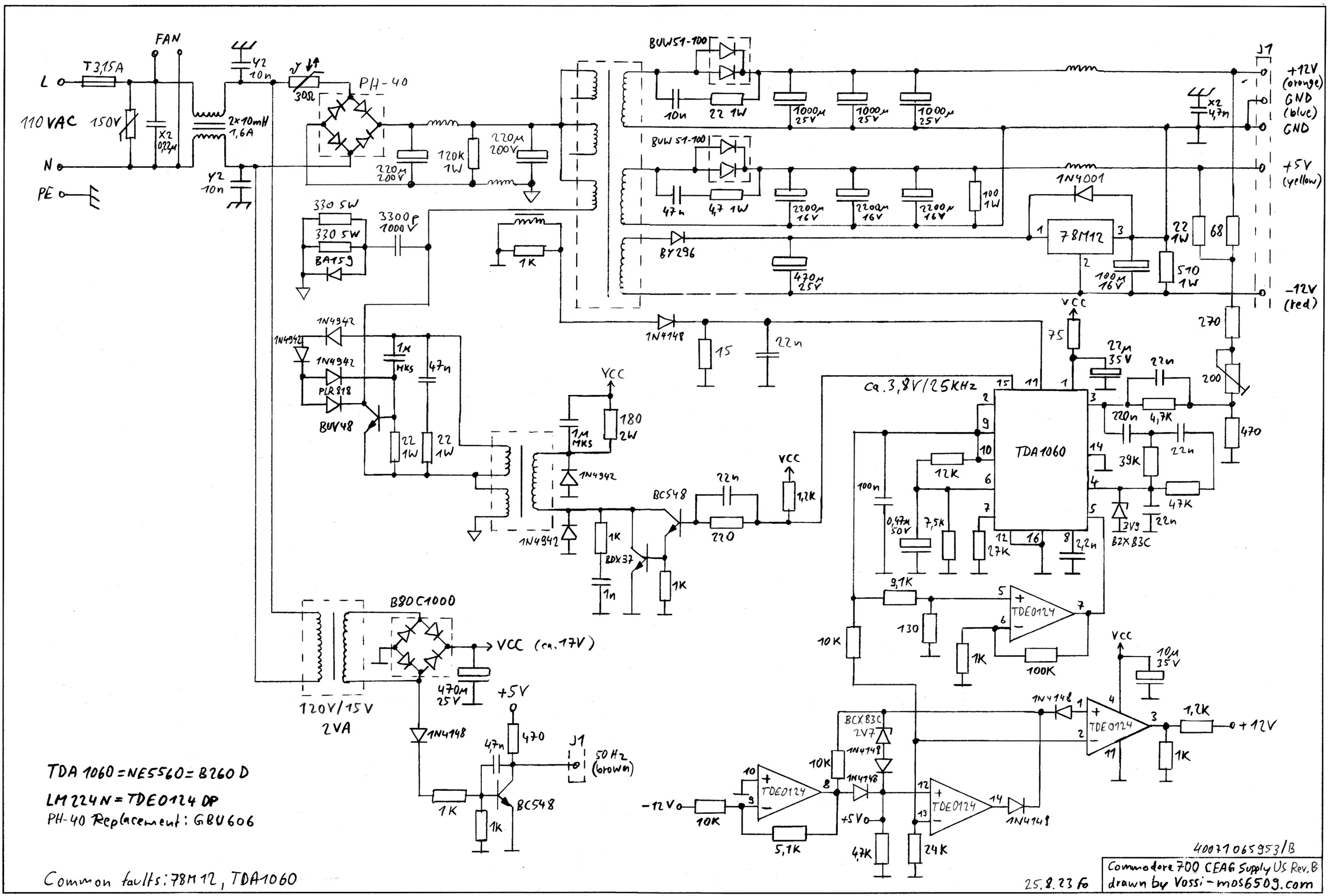

TDA 1060 = NE5560 = B260 D

LM224N = TDE0124 DP

PH-40 Replacement: GBU606

Common faults: 78M12, TDA1060

40071065953/B

25.8.23 Fo

Commodore 700 CEAG Supply US Rev. B
drawn by Vossi - mos6509.com