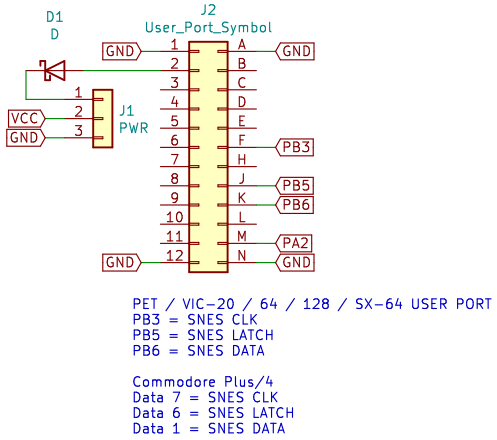

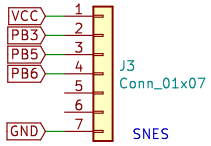

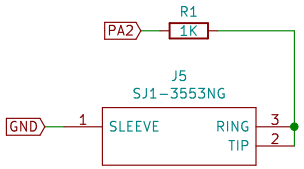

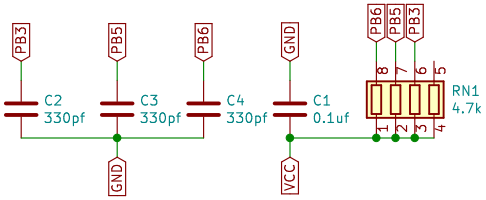

Kevin Williams
TexElec.com

Sheet: /
File: PetRobot.sch

Title: Pet Robot SNES Adapter for David Murray

Size: A	Date: 2020-11-22	**Rev: v1.0**
KiCad E.D.A. kicad (5.1.8)-1		Id: 1/1